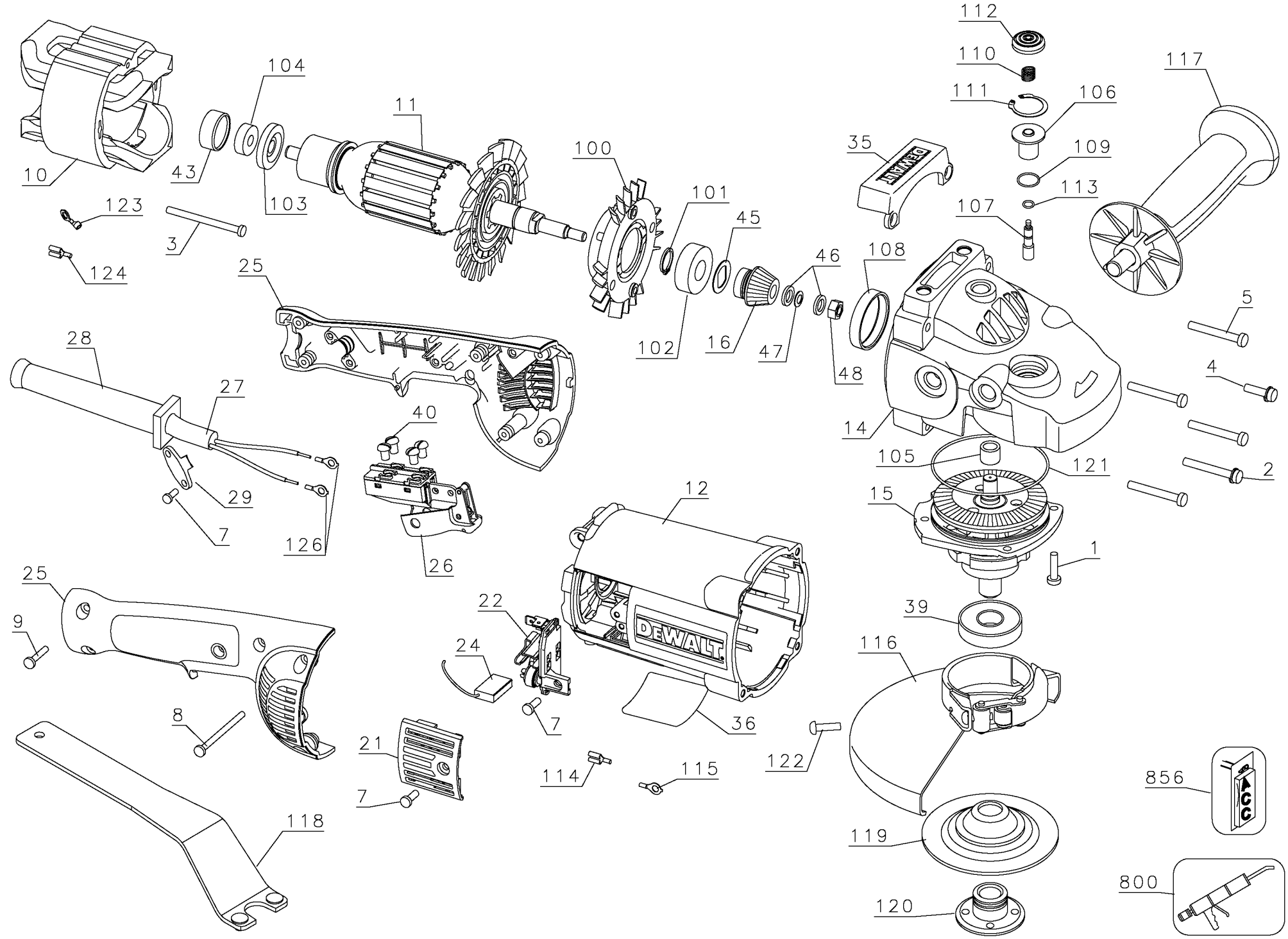
112
110
117
111
106
104
11
35
109
100
113
43
101
45
107
10
103
123
3
46
108
124
25
5
28
102
16
47
48
4
27
40
14
105
121
2
29
15
7
126
12
1
26
25
22
39
9
24
116
DEWALT
8
7
36
21
114
115
122
856
7
118
119
800
120

Parts List for D28494MB3 Type 1

Item Number	Part Number	Description	Qty Required
1	330045-15	SCREW	4
2	330019-26	SCREW	4
3	330019-19	SCREW	2
4	330045-70	SCREW	1
5	330045-67	SCREW	1
7	330019-11	SCREW	6
8	330019-18	SCREW,PLASTITE	3
9	330019-32	SCREW	4
10	614024-00SV	FIELD	1
11	635998-01	ARMATURE KIT	1
12	393239-00	FIELD CASE	1
14	398618-00SV	GEAR CASE ASSY.	1
15	398621-09SV	GEAR CASE COVER ASSY	1
16	603237-01	PINION ASSY.	1
21	394387-00	BRUSH DOOR	2
22	617001-00	BRUSH HLDR.ASSY	2
24	392574-01	BRUSH	2
25	395184-00	HANDLE & COVER	1
26	394375-04	SWITCH	1
27	386117-01	CORD & PLUG	1
28	604118-00	CORD PROTECTOR	1
29	608780-00	CORD CLAMP	1
35	620579-00	BUMPER	1
36	000000-00	No Longer Available	1
39	445928-01	SOFT MOUNT	1
40	384127-01	SCREW	4
43	609970-00	BEARING CUP	1

COPYRIGHT© 2005. All Rights Reserved.
Parts list, pricing, and availability subject to change. Please visit www.dewaltservicenet.com for current parts information.

Parts List for D28494MB3 Type 1

Item Number	Part Number	Description	Qty Required
45	608568-00	WASHER	1
46	607502-00	WASHER	2
47	614045-00	SPRING WASHER	1
48	609125-00	LOCK NUT	1
100	393222-00	STATOR	1
101	398605-00	RETAINING RING	1
102	605040-27	BALL BEARING	1
103	393238-00	DUST SHIELD	1
104	N110359	BEARING	1
105	330004-06	BEARING,NEEDLE	1
106	611213-00	SLEEVE	1
107	611212-00	PIN	1
108	609971-00	SLEEVE	1
109	50049-00	O RING	1
110	395029-00	SPRING	1
111	603470-00	RETAINING RING	1
112	610999-00	CAP	1
113	603608-00	O RING	1
114	000000-00	No Longer Available	1
115	053650-00	TERMINAL	1
116	N037746	GUARD	1
117	651858-00	SIDE HANDLE	1
118	061820-01	SPANNER WRENCH	1
119	054339-00	FLANGE	1
120	22191-00	NUT, CLAMP	1
121	397031-00	O-RING	1
122	606863-00	SCREW	1

COPYRIGHT© 2005. All Rights Reserved.
Parts list, pricing, and availability subject to change. Please visit www.dewaltservicenet.com for current parts information.

Parts List for D28494MB3 Type 1

Item Number	Part Number	Description	Qty Required
123	610057-00	TERMINAL	1
124	612273-00	TERMINAL	1
126	395716-00	TERMINAL	2
800	429954-01	GREASE, 500GRAMS	1
800	429954-00	GREASE, 7LBS	1
856	DW4719	7X1/4 FASTCUT BK	1

COPYRIGHT© 2005. All Rights Reserved.
Parts list, pricing, and availability subject to change. Please visit www.dewaltservicenet.com for current parts information.